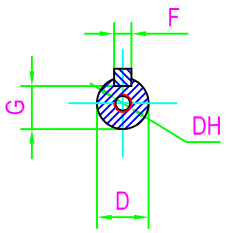

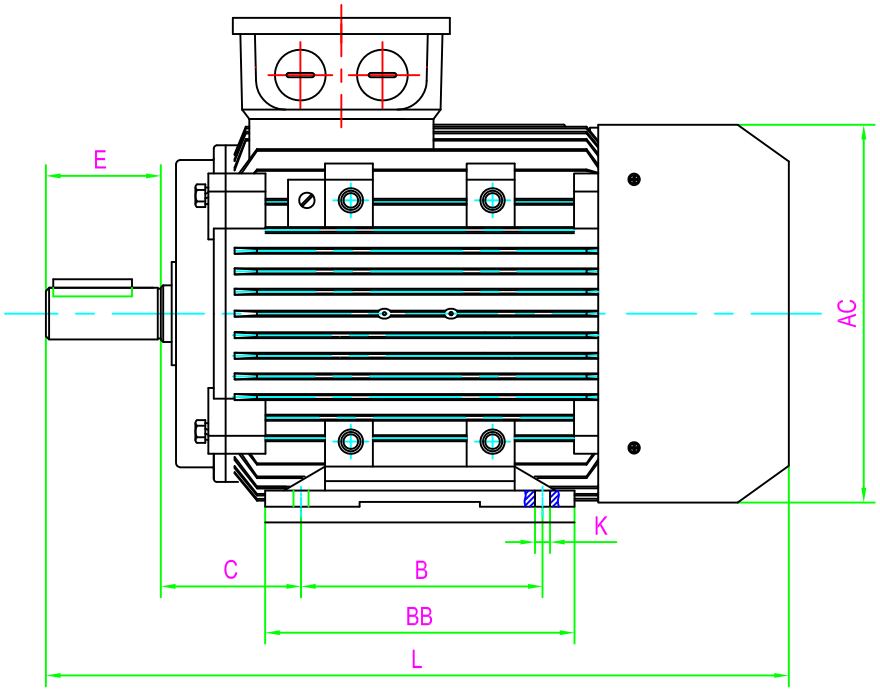

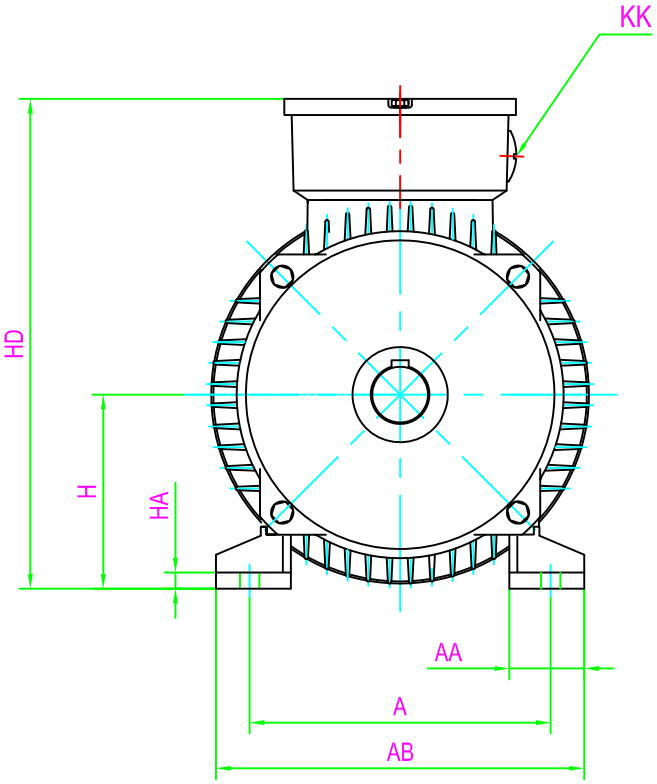

CLIENT:		
FRAME	160M	KW
VOLTS		RPM

FOOT-OR-FLANGE-MOUNTING																					SHAFT EXT.DE ONLY						WEIGHT(kg)									
A	AA	AB	AC	B	BB	C	H	HA	HD	K	KK	L									D	DH	E	F	G											
254	55	320	315	210	260	108	160	18	415	15	2-M40X1.5	615									42	M16X36	110	12	37		2A160M1-2	2A160M2-2	2A160M-4	2A160M-6	2A160M1-8	2A160M2-8				

CUSTOMER APPROVAL

SIGNATURE

DATE

2A160M B3	DATE		CHECKED BY	
	DESIGNED BY		APPROVED BY	
DIMENSION OUTLINE	ISSUE	DATE	CERTIFIED BY	
	ISSUE	DATE	CERTIFIED BY	
DWG #	ISSUE	DATE	CERTIFIED BY	
	ISSUE	DATE	CERTIFIED BY	