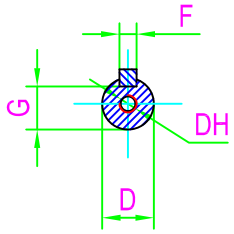

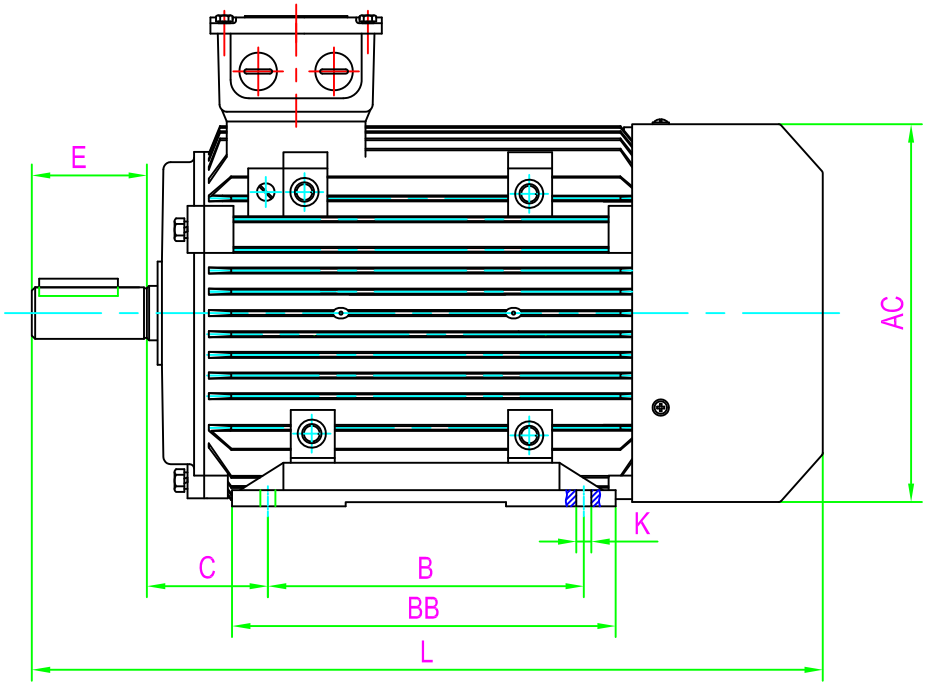

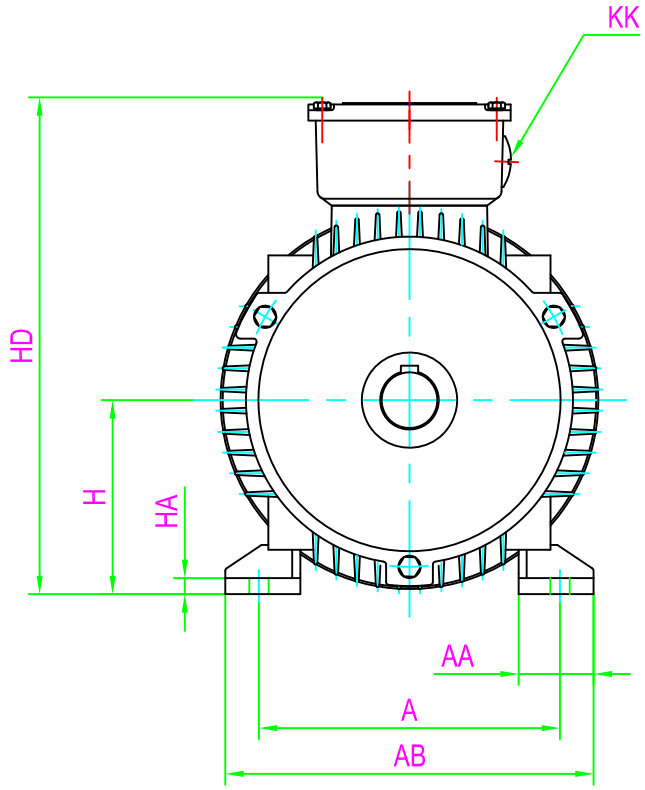

CLIENT:		
	KW	RPM
	112	
	FRAME	VOLTS

FOOT-OR-FLANGE-MOUNTING																					SHAFT EXT.DE ONLY						WEIGHT(kg)									
A	AA	AB	AC	B	BB	C	H	HA	HD	K	KK	L									D	DH	E	F	G											
190	41	230	220	140	181	70	112	12	302	12	2-M32X1.5	435									28	M10X22	60	8	24		2A112M-2	2A112M-4	2A112M-6	2A112M-8						

CUSTOMER APPROVAL

SIGNATURE

DATE

2A112 B3	DATE			CHECKED BY	
	DESIGNED BY			APPROVED BY	
DIMENSION OUTLINE	ISSUE		DATE	CERTIFIED BY	
	ISSUE		DATE	CERTIFIED BY	
DWG #	ISSUE		DATE	CERTIFIED BY	
	ISSUE		DATE	CERTIFIED BY	