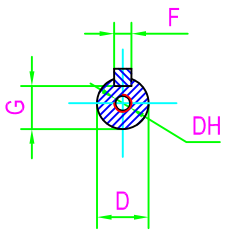

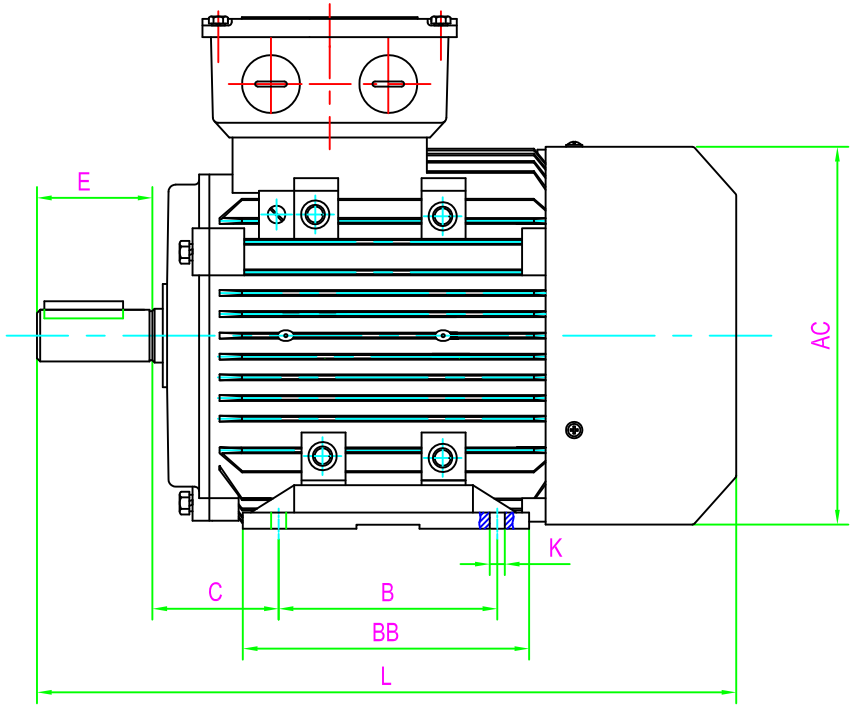

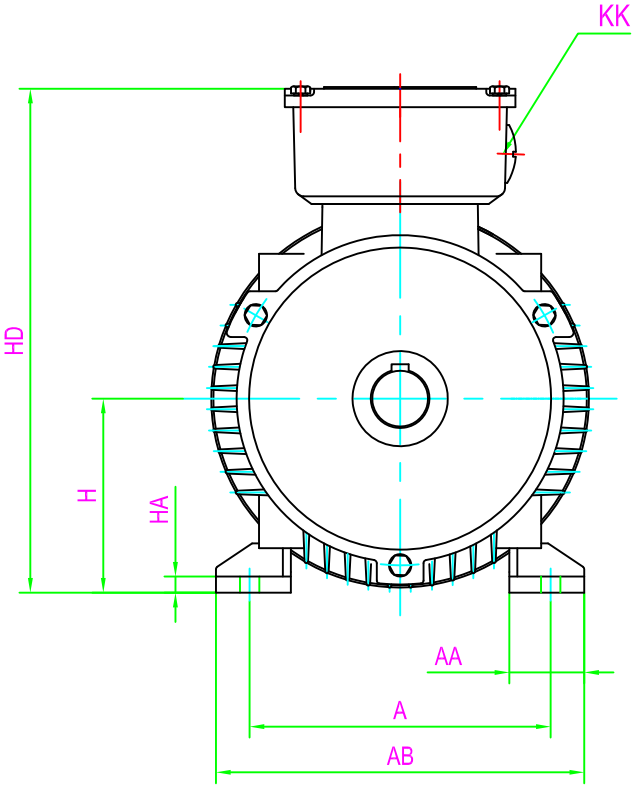

CLIENT:		
FRAME	71	KW
VOLTS		RPM

FOOT-OR-FLANGE-MOUNTING																					SHAFT EXT.DE ONLY						WEIGHT(kg)									
A	AA	AB	AC	B	BB	C	H	HA	HD	K	KK	L									D	DH	E	F	G											
112	26	150	136	90	110	45	71	8	198	7	2-M20X1.5	245									14	M5X12	30	5	11		1A71M1-2	1A71M2-2	1A71M1-4	1A71M2-4	1A71M1-6	1A71M2-6				

CUSTOMER APPROVAL

SIGNATURE

DATE

1A71 B3	DATE		CHECKED BY	
	DESIGNED BY		APPROVED BY	
DIMENSION OUTLINE	ISSUE	DATE	CERTIFIED BY	
	ISSUE	DATE	CERTIFIED BY	
DWG #	ISSUE	DATE	CERTIFIED BY	
	ISSUE	DATE	CERTIFIED BY	