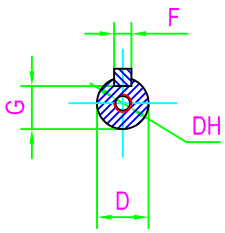

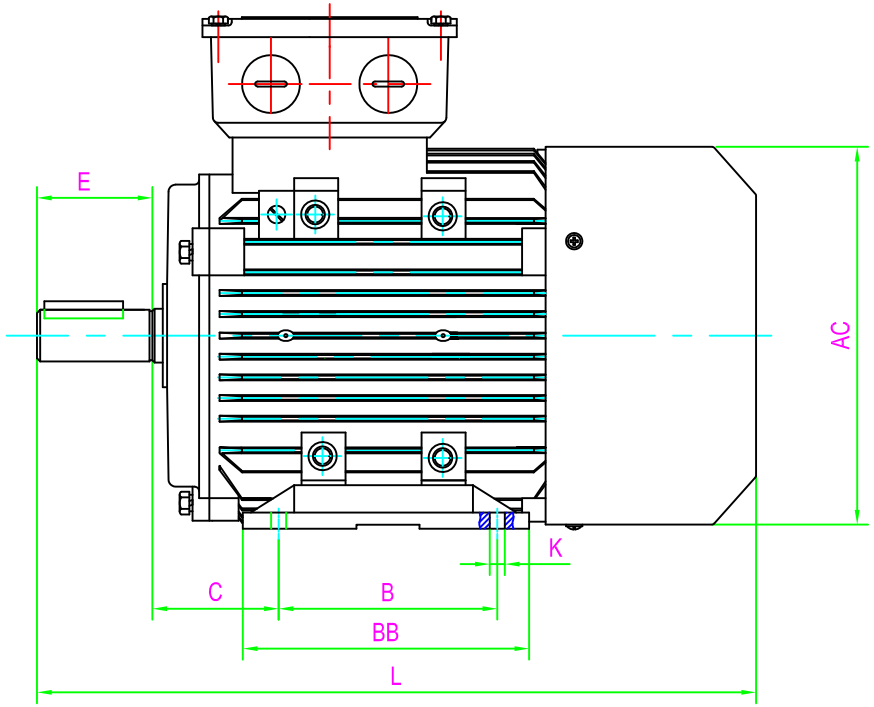

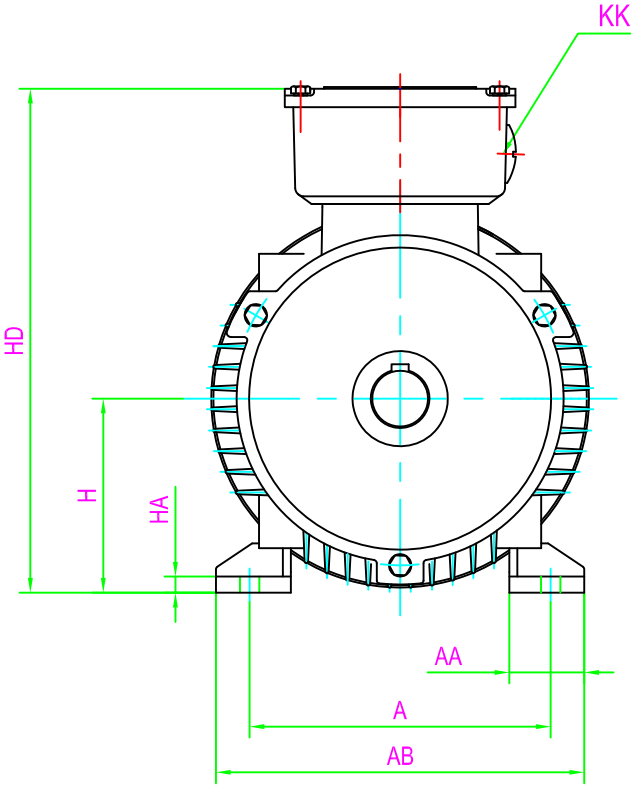

CLIENT:		
FRAME	56	KW
VOLTS		RPM

FOOT-OR-FLANGE-MOUNTING																					SHAFT EXT.DE ONLY						WEIGHT(kg)									
A	AA	AB	AC	B	BB	C	H	HA	HD	K	KK	L									D	DH	E	F	G											
90	23	115	110	71	88	36	56	7	156	5.8	2-M20X1.5	199									9	M4X12	20	3	7.2		1A56-2	1A56-4								

CUSTOMER APPROVAL

SIGNATURE

DATE

1A56 B3	DATE		CHECKED BY	
	DESIGNED BY		APPROVED BY	
DIMENSION OUTLINE	ISSUE	DATE	CERTIFIED BY	
	ISSUE	DATE	CERTIFIED BY	
DWG #	ISSUE	DATE	CERTIFIED BY	
	ISSUE	DATE	CERTIFIED BY	