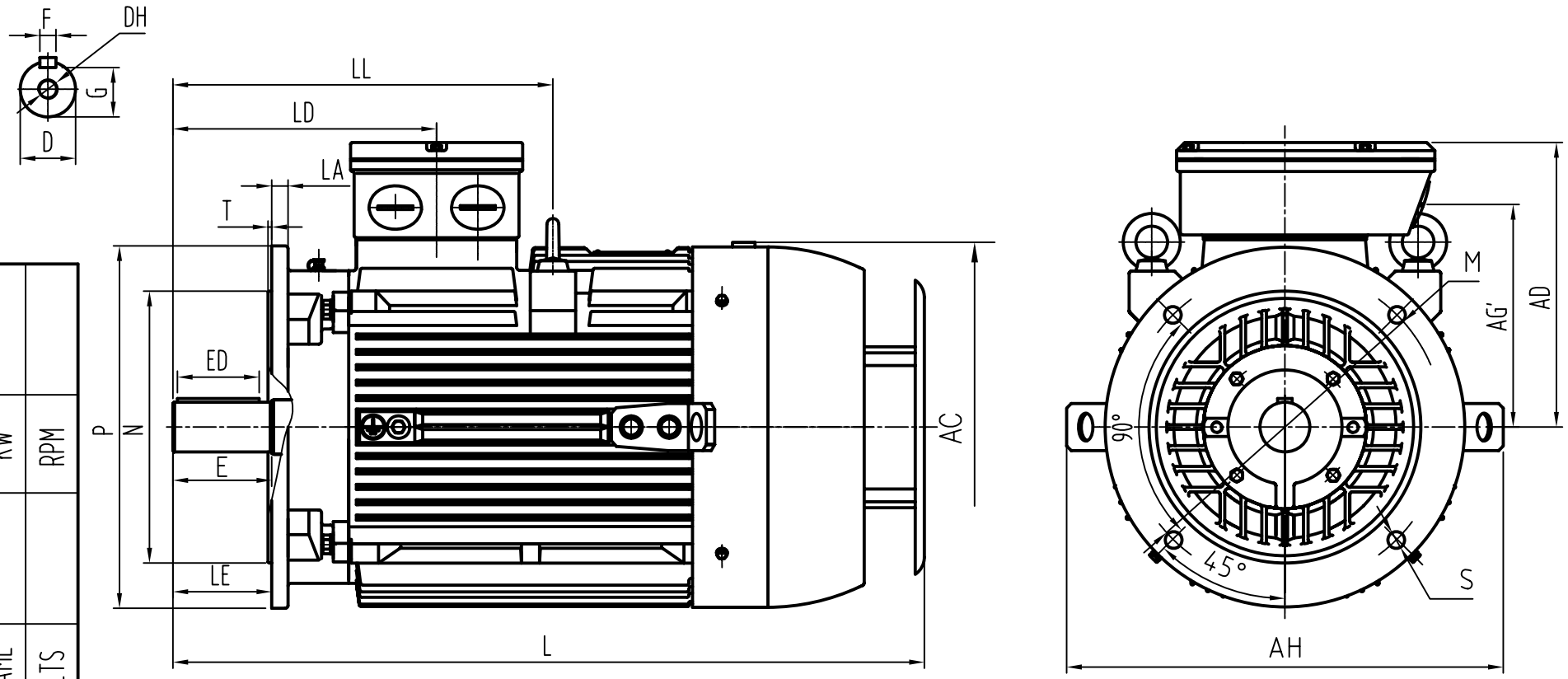

CLIENT:	KW	RPM
	FRAME	VOLTS

OUTLINE DIMENSIONS FLANGE MOUNTED MOTORS																		SHAFT EXT.DE ONLY						WEIGHT
AC	AD	AH	AG'	KK	L	LA	LD	LE	LL	M	N	P	S	T				D	DH	E	ED	F	G	
ϕ420	324	547	247	M50X1.5	859	17	291	110	419.5	ϕ350	ϕ300	ϕ400	4×ϕ18.5	5				ϕ55 $^{+0.03}_{+0.011}$	M20×42	110	90	16	49 $^{0}_{-0.2}$	

CUSTOMER APPROVAL _____ SIGNATURE _____ DATE

2L-200 2~8P (V1) DIMENSION OUTLINE					
	DATE	2010.10.27		CHK	Qu Hualong
	DRAWN	ZHANG HONG		APPD	Zhang Wenbin
	ISSUE	A	DATE	CERTIFIED BY	
	ISSUE	B	DATE	CERTIFIED BY	
	ISSUE	C	DATE	CERTIFIED BY	
	ISSUE	D	DATE	CERTIFIED BY	