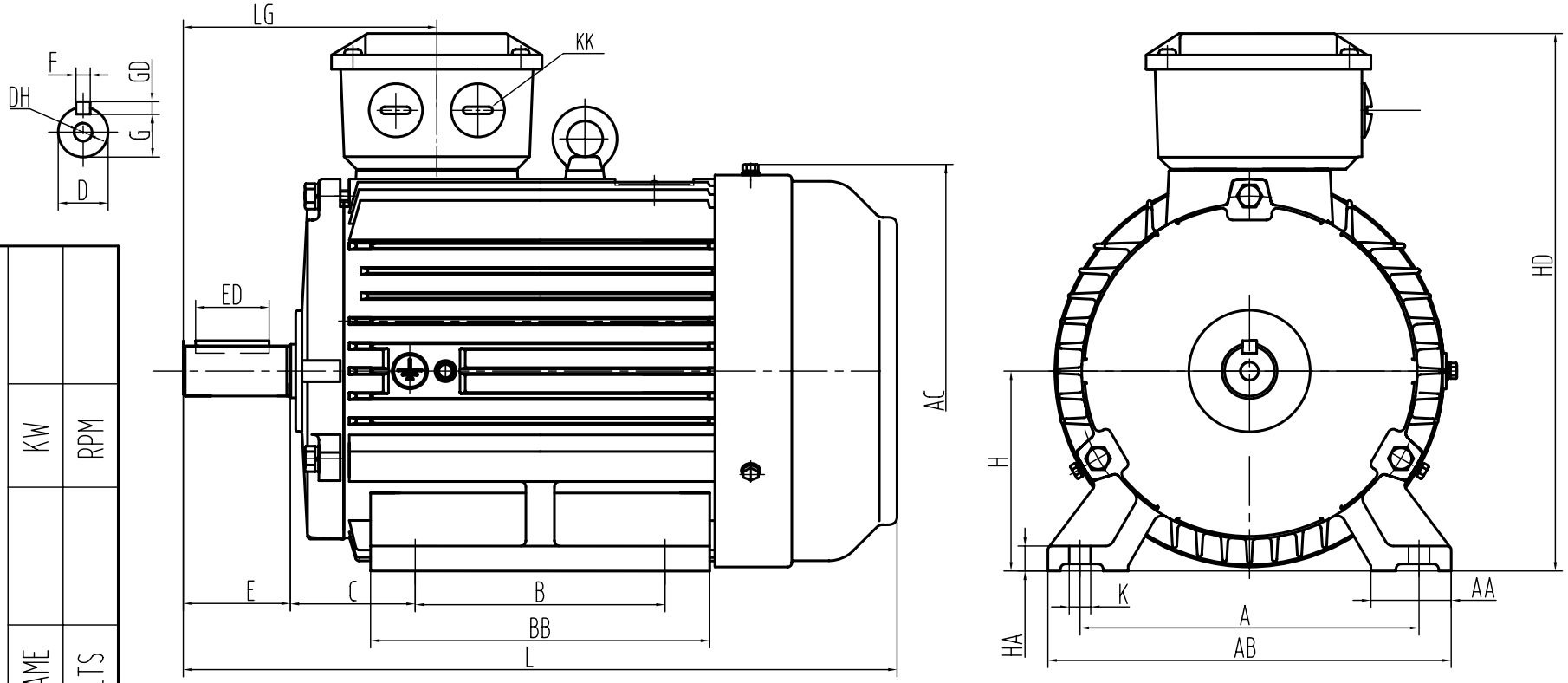

CLIENT:		
	KW	RPM
	FRAME	VOLTS

OUTLINE DIMENSIONS FOOT MOUNTED MOTORS																		SHAFT EXT.DE ONLY							WEIGHT
A	AA	AB	AC			B	BB	C	H		HA	HD	K	KK	LG	L		D	DH	E	ED	F	G	GD	
190	45	230	236			140	255	70	112		14	300	12	M32X1.5	144	480		28	M10X22	60	45	8	24	7	

CUSTOMER APPROVAL _____ SIGNATURE _____ DATE

2L-112 2-8P (B3)	DATE	2005.12.6	CHK	
	DRAWN	Liu	APPD	
DIMENSION OUTLINE	ISSUE A DATE		CERTIFIED BY	
	ISSUE B DATE		CERTIFIED BY	
	ISSUE C DATE		CERTIFIED BY	
	ISSUE D DATE		CERTIFIED BY	