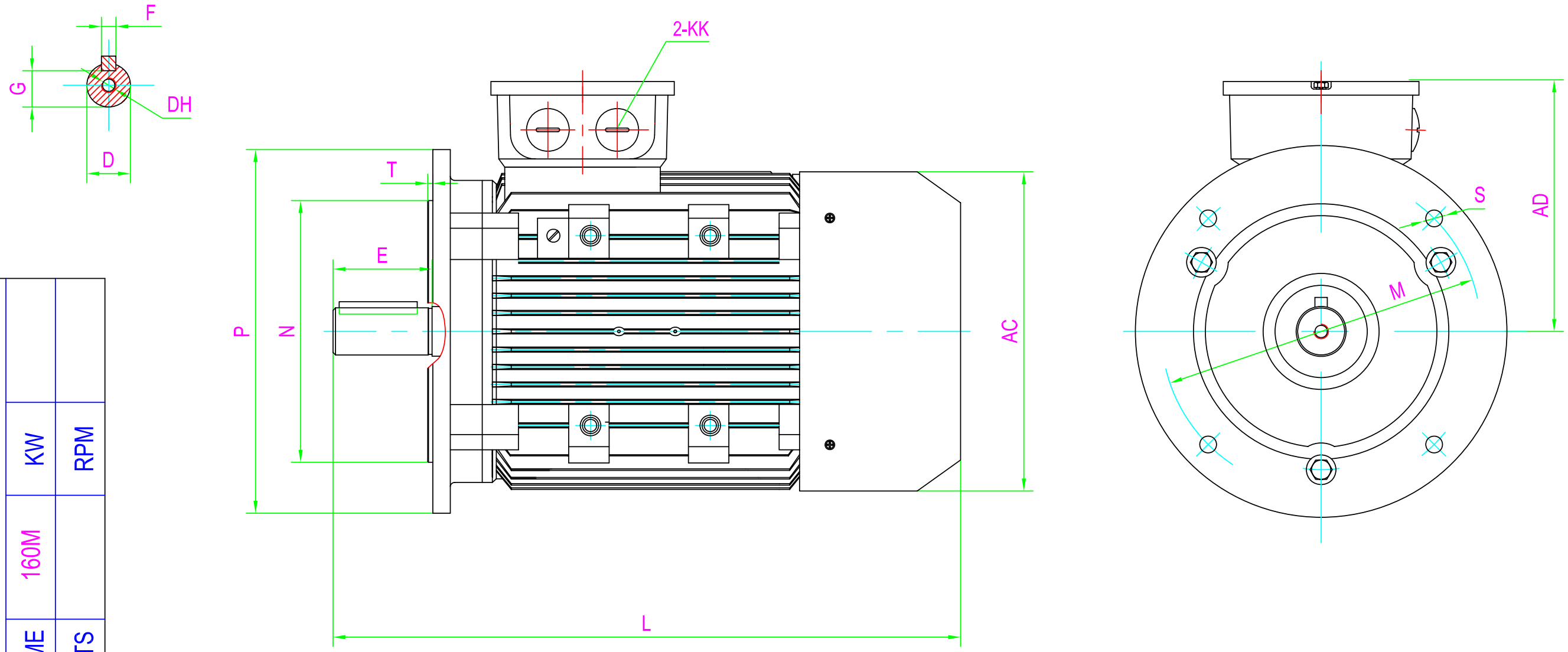

CLIENT:	
FRAME	160M
VOLTS	
	KW
	RPM

OUTLINE DIMENSIONS FLANGE MOUNTED MOTORS																		SHAFT EXT.DE ONLY						WEIGHT(kg)									
AC	AD	KK	L						M	N	P	S	T					D	DH	E	F	G											
315	255	M40×1.5	615						300	250	350	Ø19	5					42	M16X36	110	12	37		2A160M1-2	2A160M2-2	2A160M-4	2A160M-6	1A160M1-8	1A160M2-8				

CUSTOMER APPROVAL _____ SIGNATURE _____ DATE

2A160M B5 DIMENSION OUTLINE	DATE			CHECKED BY	
	DESIGNED BY			APPROVED BY	
	ISSUE		DATE	CERTIFIED BY	
	ISSUE		DATE	CERTIFIED BY	
DWG #	ISSUE		DATE	CERTIFIED BY	
	ISSUE		DATE	CERTIFIED BY	