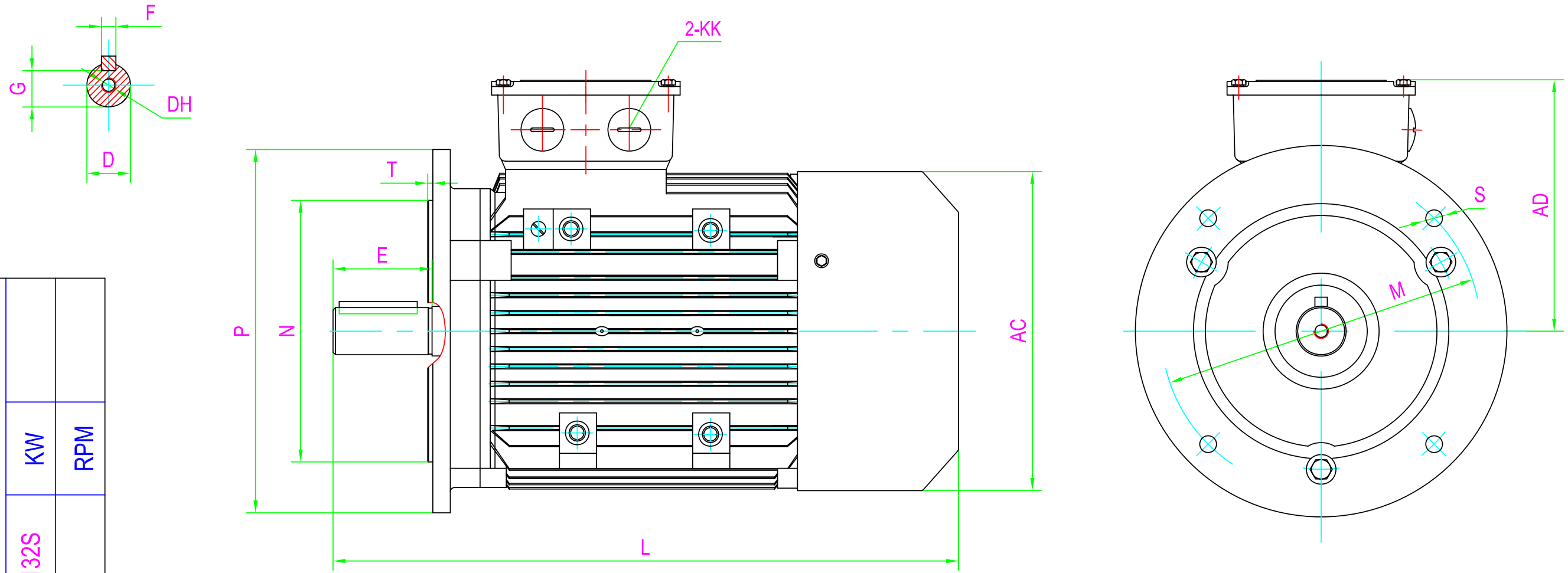

CLIENT:		
	KW	RPM
	132S	
	FRAME	VOLTS

OUTLINE DIMENSIONS FLANGE MOUNTED MOTORS																		SHAFT EXT.DE ONLY						WEIGHT(kg)									
AC	AD	KK	L						M	N	P	S	T					D	DH	E	F	G											
259	210	M32×1.5	470						265	230	300	Ø15	4					38	M12X28	80	10	33		2A132S1-2	2A132S2-2	2A132S-4	2A132S-6	1A132S-8					

CUSTOMER APPROVAL

SIGNATURE

DATE

2A132S B5 DIMENSION OUTLINE	DATE			CHECKED BY	
	DESIGNED BY			APPROVED BY	
	ISSUE		DATE	CERTIFIED BY	
	ISSUE		DATE	CERTIFIED BY	
DWG #	ISSUE		DATE	CERTIFIED BY	
	ISSUE		DATE	CERTIFIED BY	