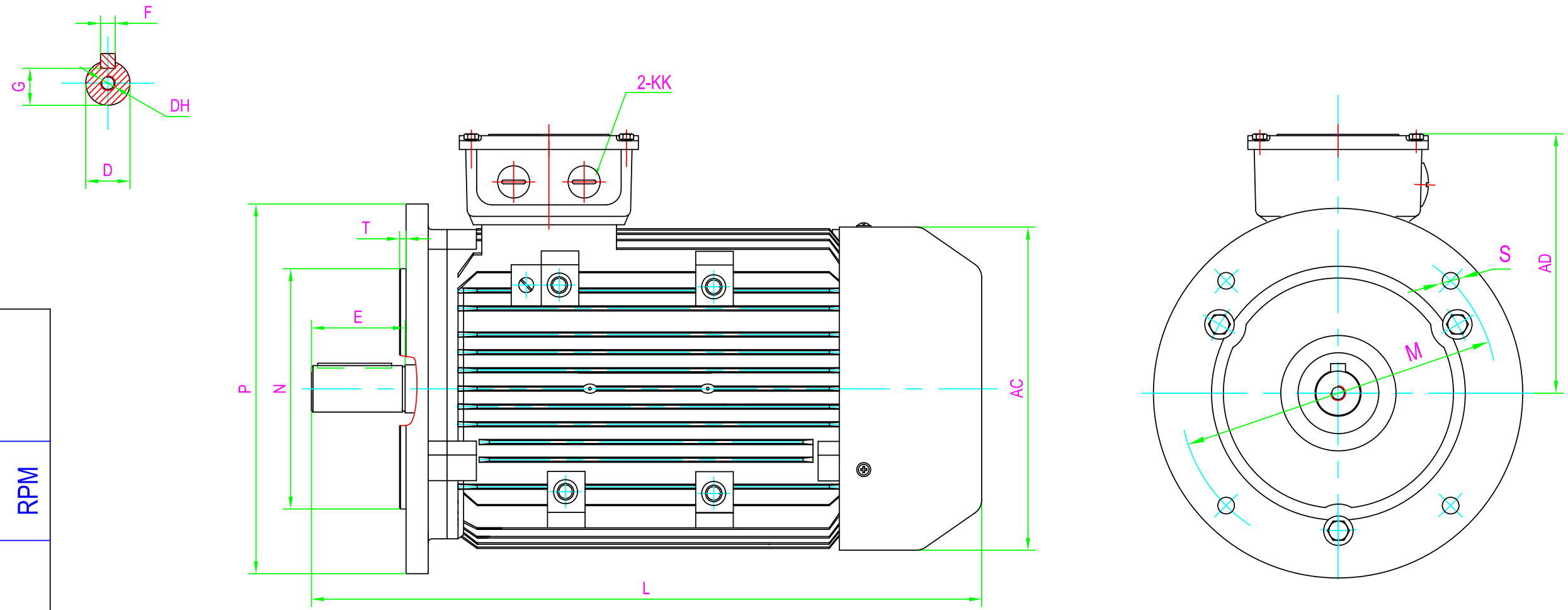


| CLIENT: | | |
|---|---|---|
| | KW | RPM |
| | 100 | |
| | FRAME | VOLTS |

| OUTLINE DIMENSIONS FLANGE MOUNTED MOTORS | | | | | | | | | | | | | | | | | | SHAFT EXT.DE ONLY | | | | | | WEIGHT(kg) | | | | | | | | | |
|---|---|---|---|---|---|---|---|---|---|---|---|---|---|---|---|---|---|---|---|---|---|---|---|---|---|---|---|---|---|---|---|---|---|
| AC | AD | KK | L | | | | | | M | N | P | S | T | | | | | D | DH | E | F | G | | | | | | | | | | | |
| 198 | 172 | M32×1.5 | 400 | | | | | | 215 | 180 | 250 | Ø15 | 4 | | | | | 28 | M10X22 | 60 | 8 | 24 | | 2A100L-2 | 2A100L1-4 | 2A100L2-4 | 2A100L-6 | 1A100L1-8 | 1A100L2-8 | | | | |

CUSTOMER APPROVAL

SIGNATURE

DATE

| 2A100 B5 | DATE | | | CHECKED BY | |
|---|---|---|---|---|---|
| | DESIGNED BY | | | APPROVED BY | |
| DIMENSION OUTLINE | ISSUE | | DATE | CERTIFIED BY | |
| | ISSUE | | DATE | CERTIFIED BY | |
| DWG # | ISSUE | | DATE | CERTIFIED BY | |
| | ISSUE | | DATE | CERTIFIED BY | |