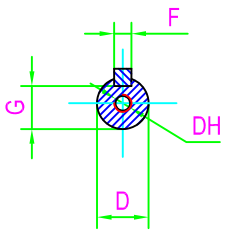

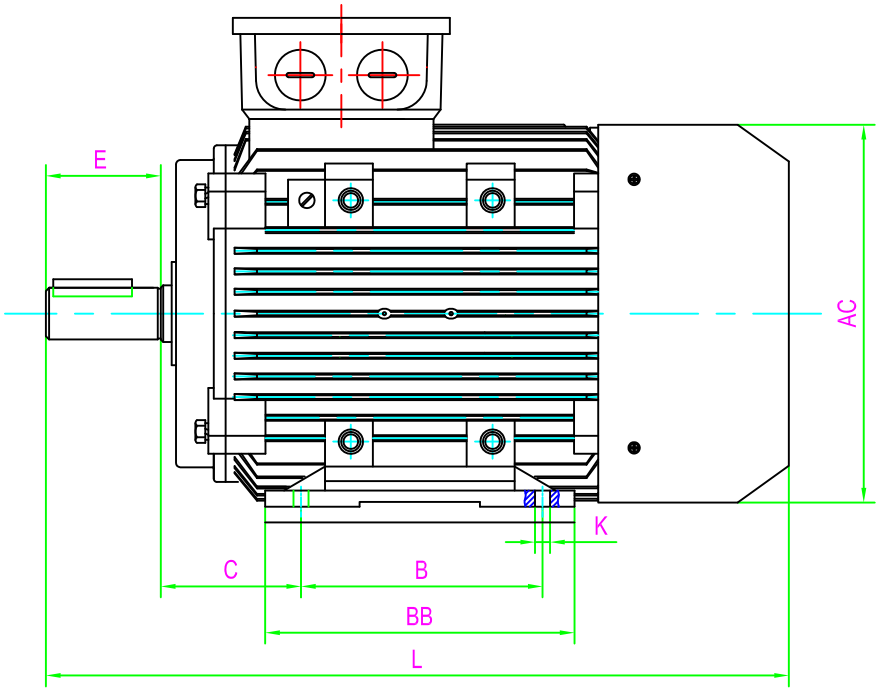

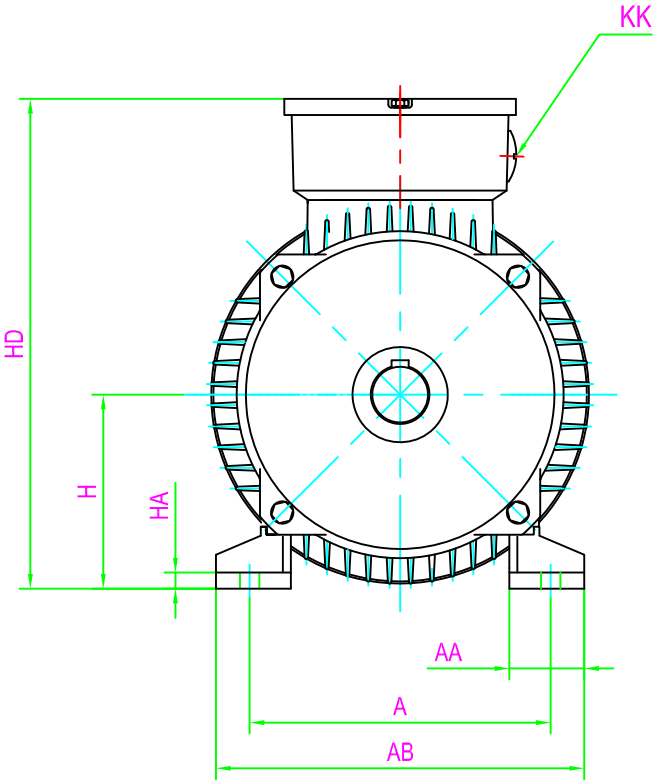

CLIENT:		
FRAME	160L	KW
VOLTS		RPM

FOOT-OR-FLANGE-MOUNTING																					SHAFT EXT.DE ONLY						WEIGHT(kg)									
A	AA	AB	AC	B	BB	C	H	HA	HD	K	KK	L									D	DH	E	F	G												
254	55	320	315	254	304	108	160	18	415	15	2-M40X1.5	660									42	M16X36	110	12	37		2A160L-2	2A160L-4	2A160L-6	2A160L-8						

CUSTOMER APPROVAL

SIGNATURE

DATE

2A160L B3	DATE			CHECKED BY	
	DESIGNED BY			APPROVED BY	
DIMENSION OUTLINE	ISSUE		DATE	CERTIFIED BY	
	ISSUE		DATE	CERTIFIED BY	
DWG #	ISSUE		DATE	CERTIFIED BY	
	ISSUE		DATE	CERTIFIED BY	