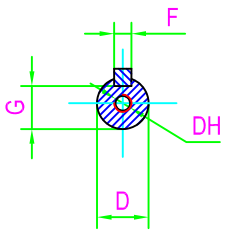

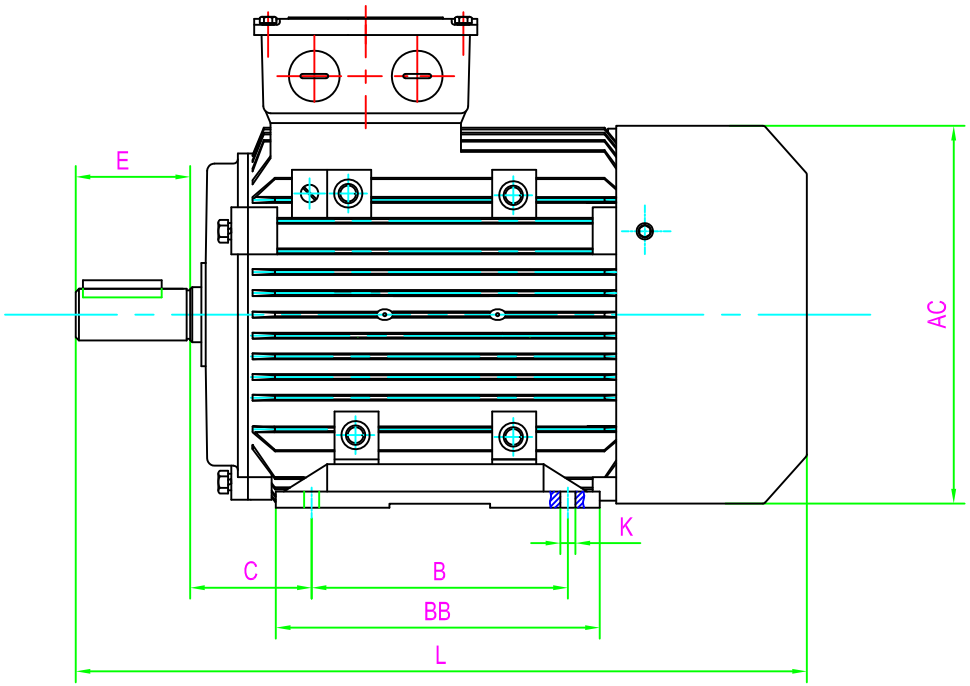

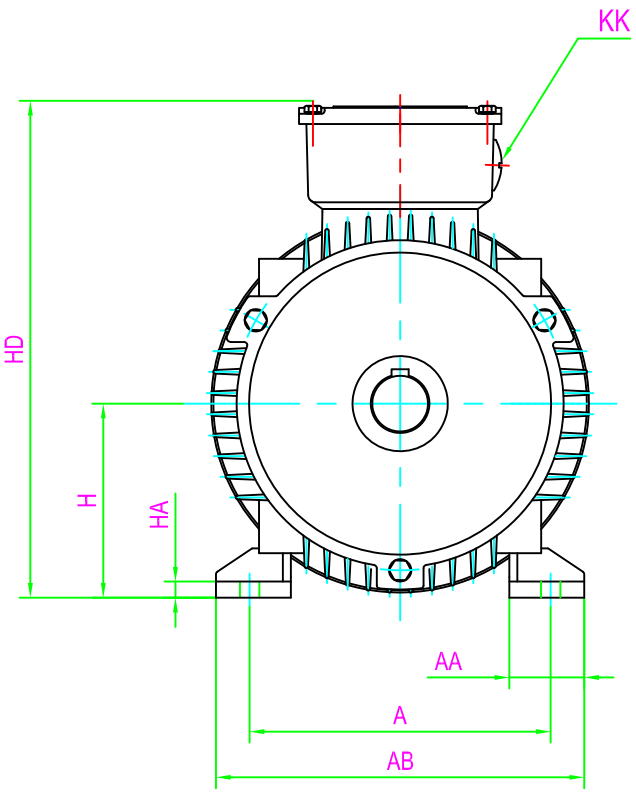

CLIENT:		
FRAME	132M	KW
VOLTS		RPM

FOOT-OR-FLANGE-MOUNTING																					SHAFT EXT.DE ONLY						WEIGHT(kg)									
A	AA	AB	AC	B	BB	C	H	HA	HD	K	KK	L									D	DH	E	F	G											
216	51	270	259	178	224	89	132	15	342	12	2-M32X1.5	510									38	M12X28	80	10	33		2A132M-4	2A132M1-6	2A132M2-6	2A132M-8						

CUSTOMER APPROVAL

SIGNATURE

DATE

2A132M B3	DATE		CHECKED BY	
	DESIGNED BY		APPROVED BY	
DIMENSION OUTLINE	ISSUE	DATE	CERTIFIED BY	
	ISSUE	DATE	CERTIFIED BY	
DWG #	ISSUE	DATE	CERTIFIED BY	
	ISSUE	DATE	CERTIFIED BY	