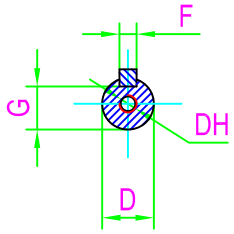

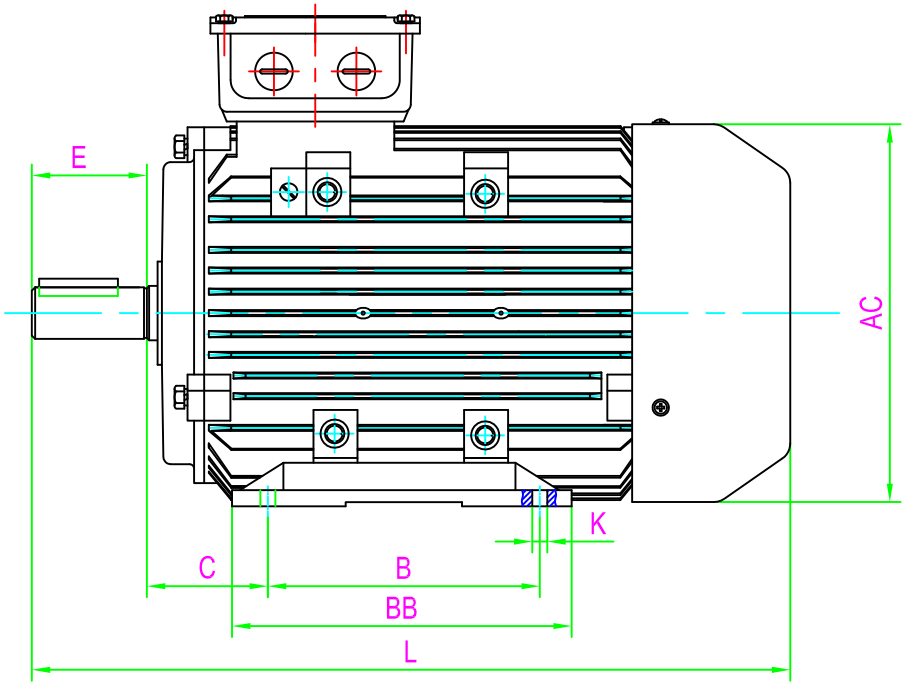

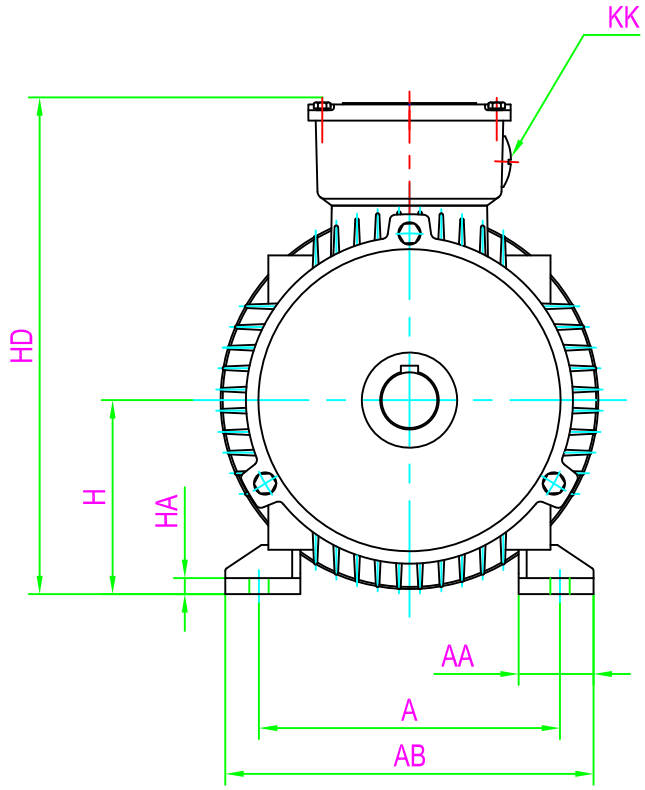

CLIENT:		
	KW	RPM
	100	
FRAME	VOLTS	

FOOT-OR-FLANGE-MOUNTING																					SHAFT EXT.DE ONLY						WEIGHT(kg)									
A	AA	AB	AC	B	BB	C	H	HA	HD	K	KK	L									D	DH	E	F	G											
160	40	205	198	140	172	63	100	11	272	12	2-M32X1.5	400									28	M10X22	60	8	24		2A100L-2	2A100L1-4	2A100L2-4	2A100L-6	1A100L1-8	1A100L2-8				

CUSTOMER APPROVAL

SIGNATURE

DATE

2A100 B3	DATE			CHECKED BY	
	DESIGNED BY			APPROVED BY	
DIMENSION OUTLINE	ISSUE		DATE	CERTIFIED BY	
	ISSUE		DATE	CERTIFIED BY	
DWG #	ISSUE		DATE	CERTIFIED BY	
	ISSUE		DATE	CERTIFIED BY	