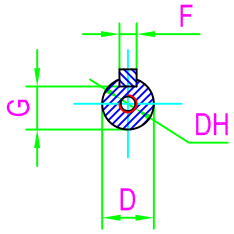

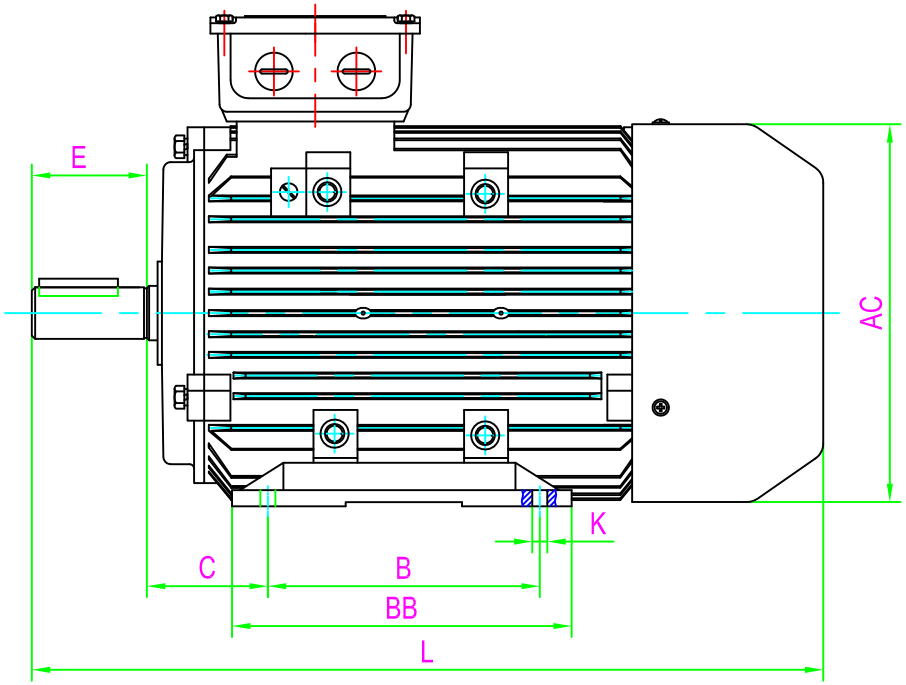

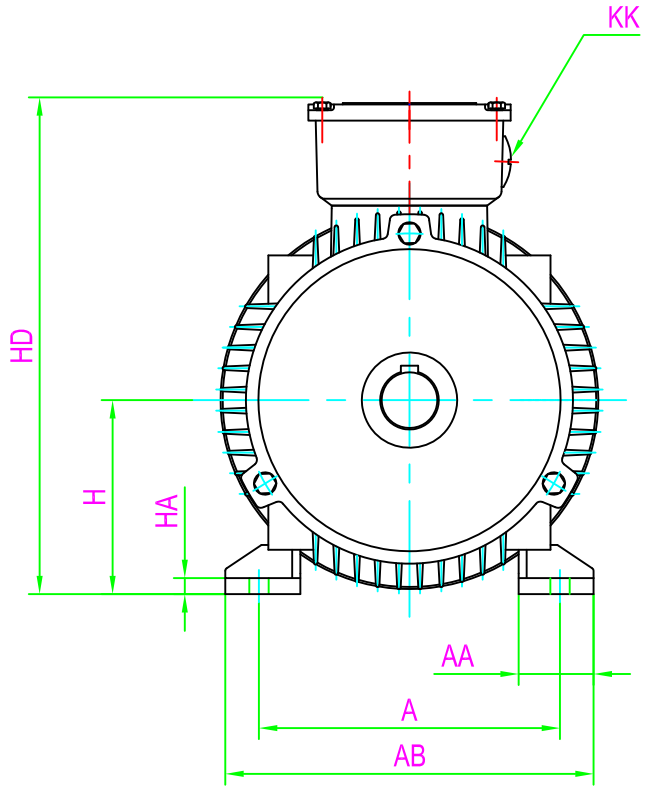

CLIENT:		
	KW	RPM
	90L	
	FRAME	VOLTS

FOOT-OR-FLANGE-MOUNTING																					SHAFT EXT.DE ONLY						WEIGHT(kg)									
A	AA	AB	AC	B	BB	C	H	HA	HD	K	KK	L									D	DH	E	F	G											
140	37	180	177	125	150	56	90	10	250	10	2-M25X1.5	360									24	M8X19	50	8	20		2A90L-2	2A90L-4	2A90L-6	1A90L-8						

CUSTOMER APPROVAL

SIGNATURE

DATE

2A90L B3	DATE		CHECKED BY	
	DESIGNED BY		APPROVED BY	
DIMENSION OUTLINE	ISSUE	DATE	CERTIFIED BY	
	ISSUE	DATE	CERTIFIED BY	
DWG #	ISSUE	DATE	CERTIFIED BY	
	ISSUE	DATE	CERTIFIED BY	