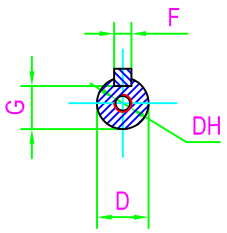

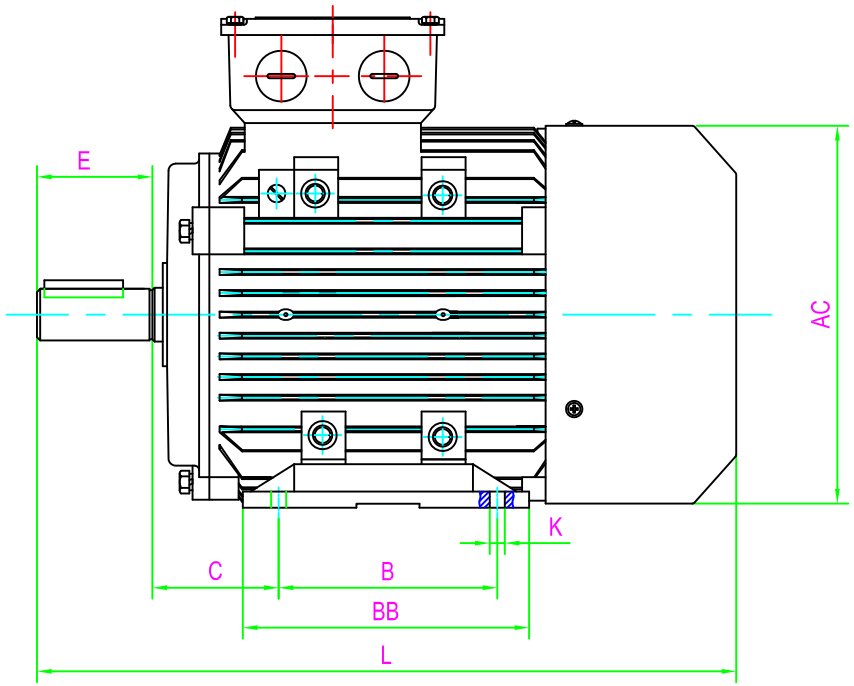

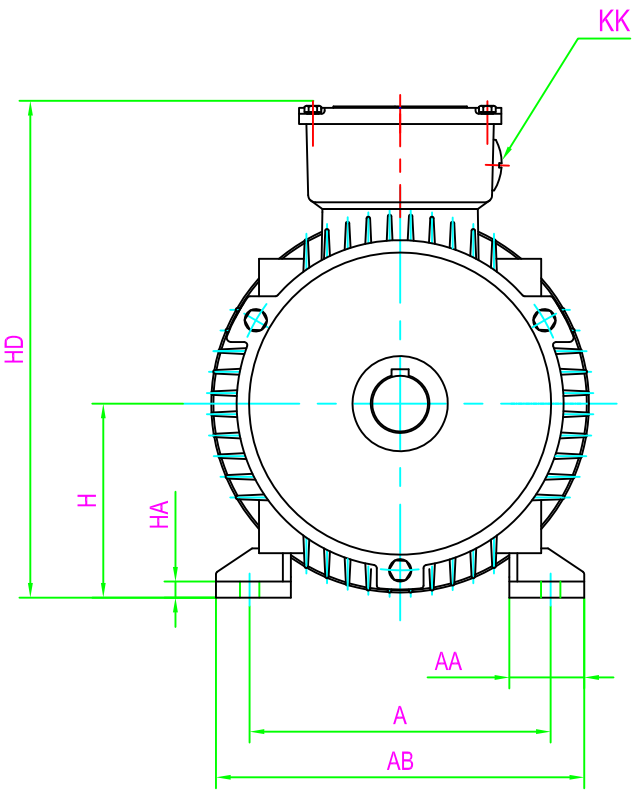

CLIENT:		
FRAME	80	KW
VOLTS		RPM

FOOT-OR-FLANGE-MOUNTING																					SHAFT EXT.DE ONLY						WEIGHT(kg)									
A	AA	AB	AC	B	BB	C	H	HA	HD	K	KK	L									D	DH	E	F	G											
125	35	165	158	100	125	50	80	9	220	10	2-M25X1.5	300									19	M6X16	40	6	15.5		2A801-2	2A802-2	1A801-4	2A802-4	1A801-6	1A802-6	1A801-8	1A802-8		

CUSTOMER APPROVAL

SIGNATURE

DATE

2A80 B3	DATE		CHECKED BY	
	DESIGNED BY		APPROVED BY	
DIMENSION OUTLINE	ISSUE	DATE	CERTIFIED BY	
	ISSUE	DATE	CERTIFIED BY	
DWG #	ISSUE	DATE	CERTIFIED BY	
	ISSUE	DATE	CERTIFIED BY	